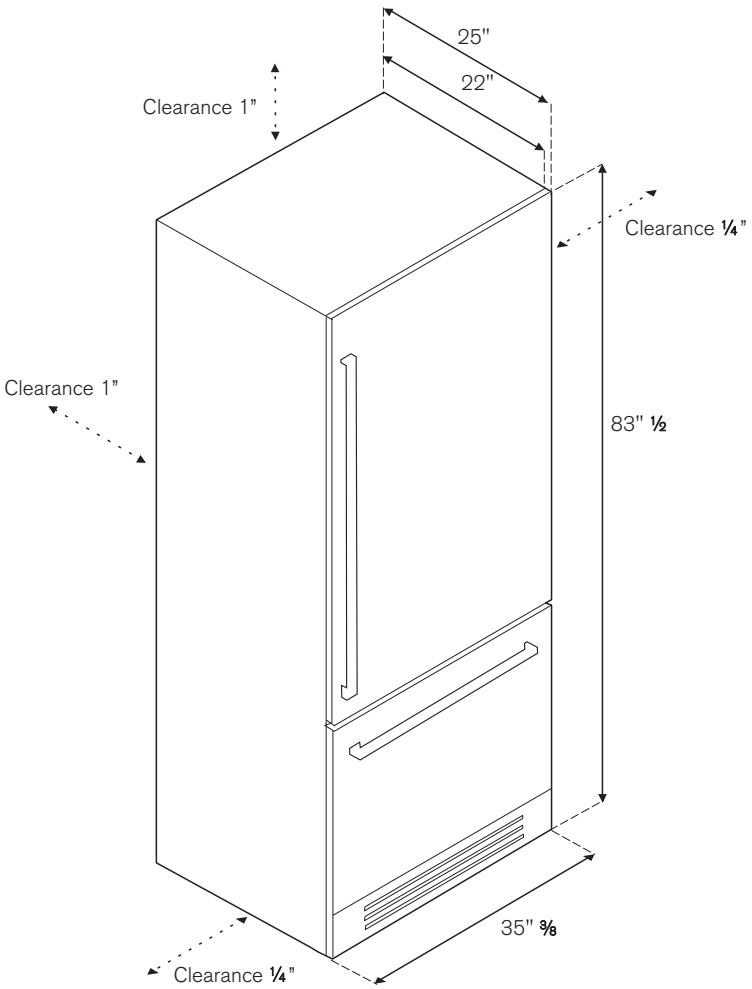
25"
22"
Clearance 1"
Clearance ¼"
Clearance 1"
83" ½
35" ⅜
Clearance ¼"

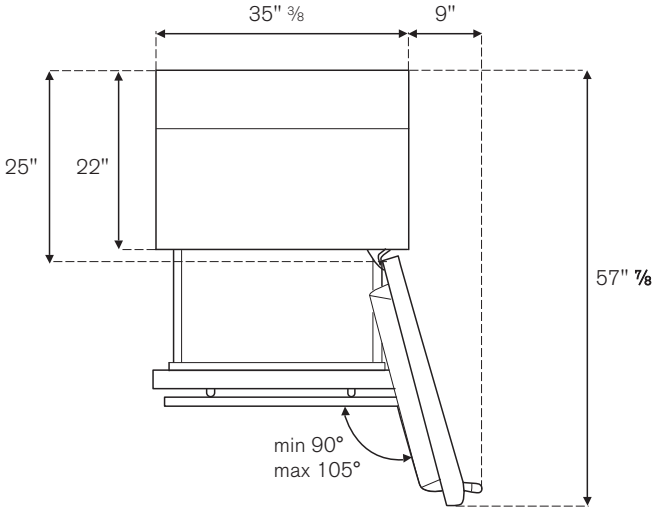
35" ⅜
9"
25"
22"
57" ⅞
min 90°
max 105°

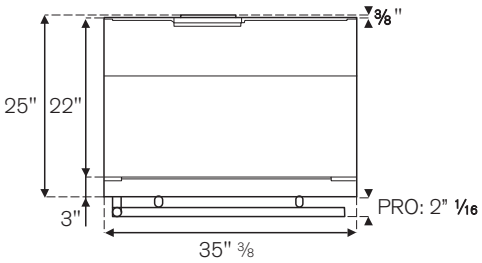
⅜"
25"
22"
3"
PRO: 2" 1/16
35" ⅜