Signature S35 Wall Mount Template

Date	12 June 2016
Drawing #	HBP3724
File Name	HBP3724_P_SignatureS35_Wall Mount Template. ai
Scale	Full Scale
Drawn By	JLM
Color	One Color (Black)
Emboss Ht.	n/a
Deboss Depth	n/a
Finish	n/a
Process	offset lithography
Notes	DO NOT PRINT DIELINES
Artwork	Digital file

Approvals	Signature	Date
Project Manager		
Product Line Manager		
Mechanical Designer		
System Engineer		
Electrical Engineer		
Safety & Regulations		
Quality Assurance		
Creative Director		
Comments		

Revision	Date	Description

Template for Wall Mounting

polk | **Signature S35**
American HiFi Center Speaker (L/C/R)

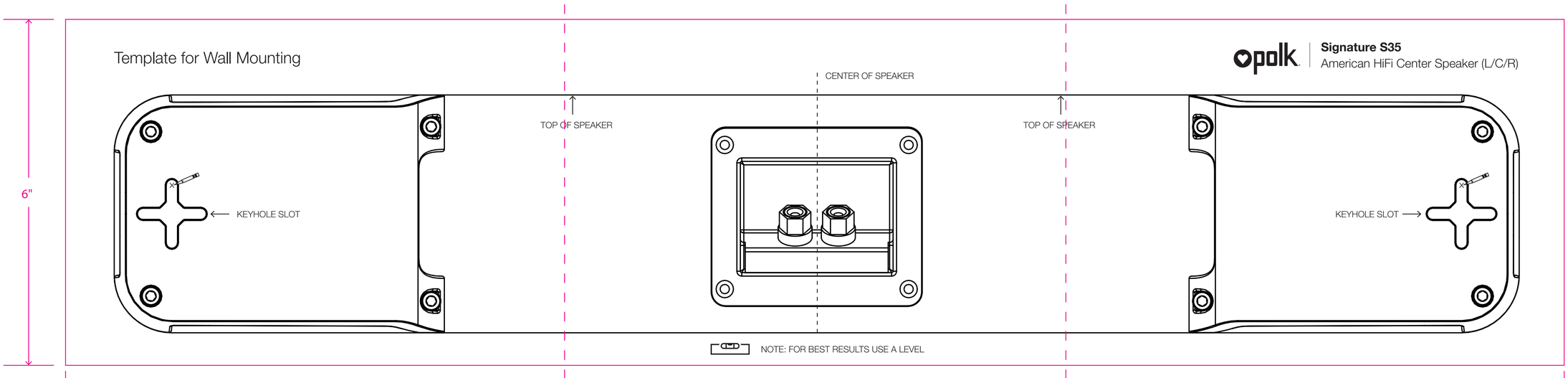

NOTE: FOR BEST RESULTS USE A LEVEL