Under-Cabinet

SAHALE

The slim and refined lines of Sahale bring a refreshing change to today's kitchens. Bright LED lighting complements your cooking experience and three fan speeds make cooking more enjoyable.

SIZE	STAINLESS	WHITE	GREASE FILTERS (replacement)	NON-DUCTED FILTERS
30 in.	BKDJ130SS	BKDJ130WH	HPFA3A30 (Type "C3")	HPF30 (Type "Xc")

PERFORMANCE

Duct Orientation	Size	Damper	Sones			CFM		
			Normal	Medium	High	Normal	Medium	High
Vertical - Rectangular	3¼ in. x 10 in.	Included	0.5	2.5	6.0	150	260	390
Horizontal - Rectangular	3¼ in. x 10 in.	Included	0.6	2.0	5.5	150	270	400
Round - Vertical	7 in.	Sold Separately	0.4	2.0	5.5	150	260	390

FEATURES	
Control type	3-speed Pushbutton with LCD
Delay off	yes
Filter Clean Reminder	yes
Heat Sentry™	yes
ADA Capable	yes
Lighting	3-level LED (included)
Grease Filters	Deluxe Micro Mesh (Qty. 2)
Installation Hardware	EZ1 Bracket
ENERGY STAR®	no
Recirculation	Non-ducted filters sold separately

AC INPUT

120V, 60 Hz - 1.4 AMPS

OPTIONAL ACCESSORIES	
7-in. Round Damper	BP87Q
7-in. Round Adapter Plate	SR680508
ADA Wiring Kit	HAWRK3
Make-up Air Dampers	MD6TU, MD8TU and MD10TU

MOUNTING HEIGHT

18 in. to 30 in. from cooktop to bottom of hood

LIMITED WARRANTY

1-year
3-year (LED modules only)
(See installation manual for full warranty text.)

FOR INDOOR USE ONLY

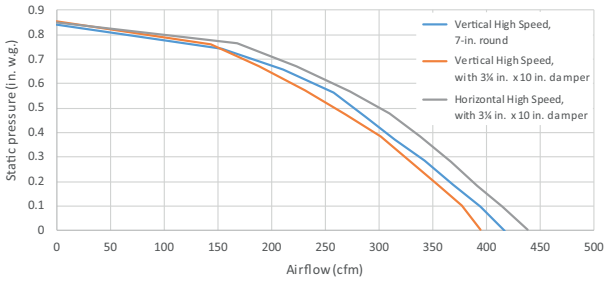

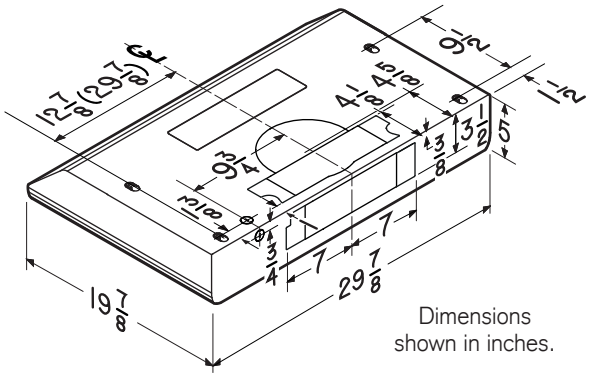

HVI-2100 CERTIFIED RATINGS comply with new testing technologies and procedures prescribed by the Home Ventilating Institute, for off-the-shelf products, as they are avaialable to consumers. Product performance is rated at 0.1 in. static pressure, based on tests conducted in AMCA's state-of-the-art test laboratory. Sones are a measure of humanly-perceived loudness, based on laboratory measurements.

99045747C

SPECIFICATION SHEET

SAHALE - BKDJ1 SERIES