30" M SERIES CONTEMPORARY SPEED OVEN

SPO3050CM/B/T



FEATURES

Provides more cooking power than a traditional microwave and offers all-in-one oven versatility by combining microwave, convection, and broil technologies

Assures predictably delicious results with 10 microwave power levels, convenient quick-start modes, and an intuitive Gourmet mode

Includes two racks and two risers to improve air circulation and enhance browning

Fits a 9-by-13 pan in the 1.6 cubic feet, stainless-steel interior

The 8" full-color LCD touchscreen has an interface and aesthetics similar to other Wolf wall ovens for a cohesive user experience

The interface is easily customizable and intuitive, with on-screen messaging to guide you through the various modes and features

Soft-open and -close door provides the luxury feel Wolf is known for

The elegant, modern design perfectly pairs with a full suite of similarly styled Sub-Zero, Wolf, and Cove appliances

Master your technique with tips and recipes from the Mastering the Speed Oven guide

Specifications are subject to change without notice. This information was generated on July 23, 2026. Verify specifications prior to finalizing your cabinetry/enclosures.

30" M SERIES CONTEMPORARY SPEED OVEN

PRODUCT SPECIFICATIONS

Model	SPO3050CM/B/T
Dimensions	29 7/8"W x 17 7/8"H x 21 1/2"D
Capacity	1.6 cu. ft.
Door Clearance	14 3/16"
Weight	103 lbs
Electrical Supply	grounded, 240/208 VAC, 60Hz
Electrical Service	15 amp dedicated circuit
Power Cord Length	6 Feet
Receptacle	NEMA 6-20R grounding type

ELECTRICAL

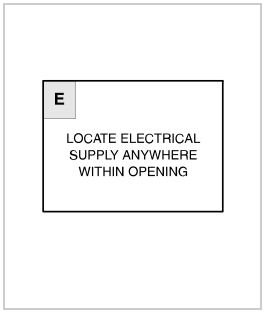

NOTE: Dimensions in parenthesis are in millimeters unless otherwise specified

DIMENSIONS

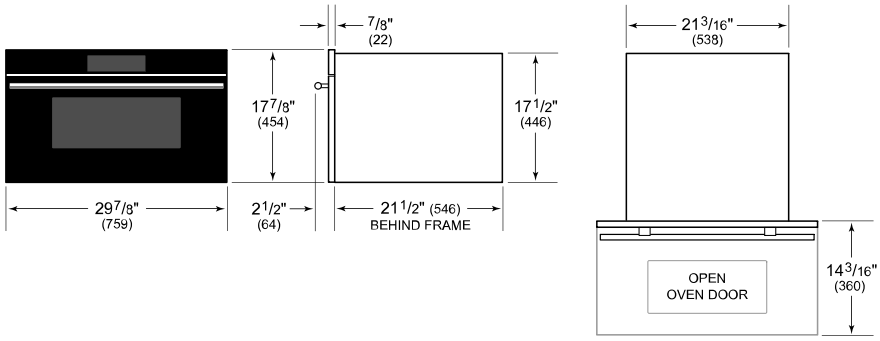

STANDARD INSTALLATION

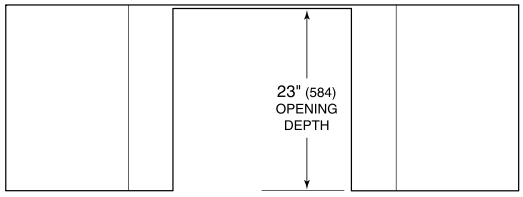

TOP VIEW

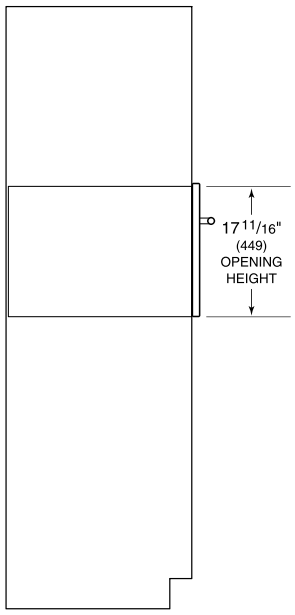

SIDE VIEW

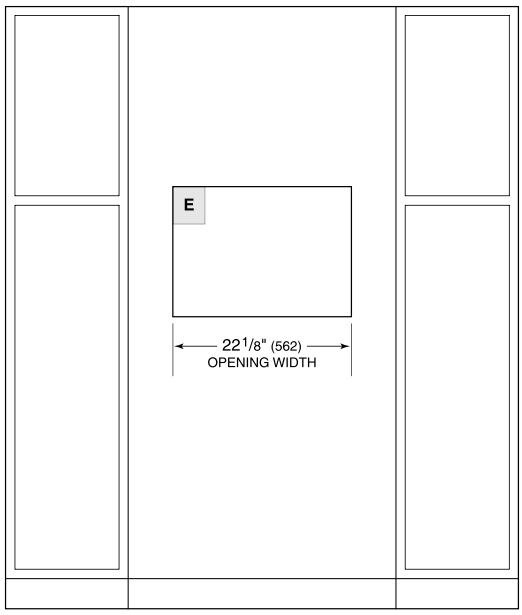

FRONT VIEW

NOTE: 24" (610) and 30" (762) models require the same opening dimensions.

Specifications are subject to change without notice. This information was generated on July 23, 2026. Verify specifications prior to finalizing your cabinetry/enclosures.